Axis AX

Expansion Power Supply Module

The AX-PSU is an Expansion Power Supply Module for use with the Advanced Axis AX Series Intelligent Fire Alarm Control Panels. The Expansion Power Supply Module provides an additional 3 amp of filtered, regulated, 24 VDC power for notification appliance circuits and auxiliary power outputs.

The AX-PSU is a completely self-contained, temperature compensated, switching power supply designed to maximize energy and enclosure space.

Simple to install, the AX-PSU typically mounts in an Axis AX Series enclosure. The unit mounts with screws to dedicated standoffs located on the right-hand side of the enclosure back box, below the base card. AC power is fed from the AC terminal block of the Axis AX Series AX-ACB module to the AX-PSU via a pluggable Molex connector. Expansion Power Supply Module availability and supervision is accomplished through wiring of the AX-PSU to the Axis AX Series AX-CTL base card.

Features

- 120 or 240 VAC Input, 50/60 Hz
- 27.4 VDC @ 5 Amp
- Temperature Compensated Output
- Switching Power Supply Technology
- Filtered & Regulated Power Output
- Emissions & Safety Shield
- ANSI / UL 864 Listed
- 3 Amp @ 24 VDC Filtered, Regulated Supply
- Easy Cabinet Mount
- Energy & Space Saving Design
- Fully Self-Contained
- Can be set to PSU only or PSU and charger

Listings and Approvals

- Certified to UL864 10th Edition – File No. S35979
- CSFM Approved: Pending
- NYCFD COA: Pending

Wiring Diagram

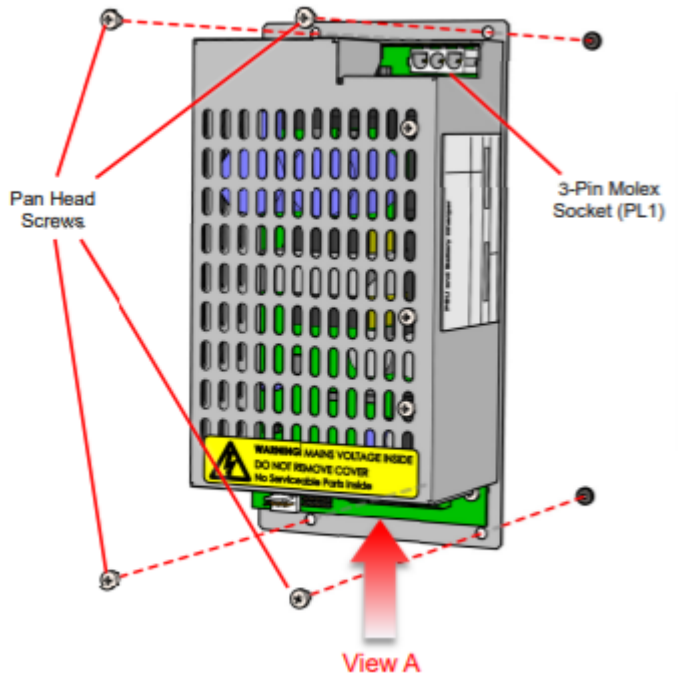

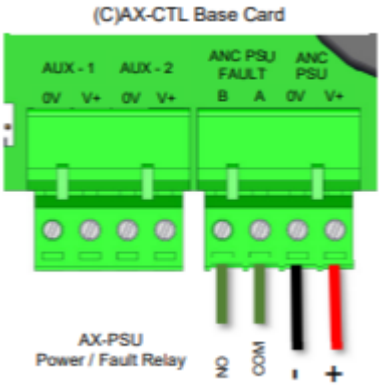

Specification

AC Input	120 VAC - 240 VAC, 50/60 Hz
DC Output Voltage Current	 24 VDC 3A PSU & charger, 5A PSU only
Output Voltage	Filtered, Regulated Temperature Compensated (Tracks AX-CTL Base Card DC Supply)
Environment	Indoor, Dry
Operating Temperature	32ºF-120ºF (0ºC-48ºC)
Humidity	10-95% (Non-condensing)
Dimensions	7.19”W x 3.69”H x .2.31”D
Weight	1 lb 10 oz

Order Codes and Options

AX-PSU	Expansion Power Supply Module

Advanced, The Bridges, Balliol Business Park, Newcastle upon Tyne, NE12 8EW, UK T: +44 (0)345 894 7000 E: enquiries@advancedco.com
W: www.advancedco.com

As our policy is one of constant product improvement the right is therefore reserved to modify product specifications without prior notice.